Product Data Sheet
00813-0100-3491, Rev AB
October 2019

Rosemount™ 499ADO

Dissolved Oxygen Sensor

A robust sensor for reliably measuring dissolved oxygen

The Rosemount 499ADO dissolved oxygen sensor is an easy-to-use amperometric sensor with a rugged construction. This sensor is ideal for measuring dissolved oxygen in aeration basins in municipal and industrial wastewater treatment plants.

ROSEMOUNT™

EMERSON™

Overview

Ease of maintenance

- Extend sensor life with simple membrane and electrolyte replacement; no special tools needed.
- Automatic temperature correction with integral Pt-100 resistance temperature device (RTD).
- Easy in-air calibration.

Versatile installation option

- Forward and rear facing 1-in. male national pipe thread (MNPT) process connections to meet a variety of application installation requirements.
- Installs in aeration basins and sidestream samples.
- Variopol (VP6) cable connector option eliminates cable twisting and allows for quick sensor replacement.

High performance design

- Measures dissolved oxygen between 0 and 20 ppm.
- Operates in process temperatures up to 122 °F (50 °C).
- High accuracy of ±0.2 ppm at 77 °F (25 °C).

Contents

Ordering information

The Rosemount 499ADO Dissolved Oxygen Sensor is intended for the determination of dissolved oxygen at the ppm level. Sensors can be immersed directly in aeration basins using the handrail mounted assembly or mounted in a variety of flow cells. The sensor is available with either an integral cable or Variopol (VP6) quick disconnect fitting. Three replacement membrane assemblies, three O-rings, and a 4 oz. (125 mL) bottle of electrolyte solution are provided with each sensor.

Table 1: Rosemount 499ADO Ordering Information

Option	Description
499ADO	Dissolved Oxygen Sensor
Transmitter compatibility	
54	Rosemount 1056, 1066-DO, 56, and 5081-A compatible
Cable options	
_	Integral 25-ft. (7.6 m) optimum EMI/RFI protected cable
VP	Sensor with VP6 fittings (requires VP interconnecting cable)
02	Integral 15-ft. (4.6 m) optimum EMI/RFI protected cable
03	Integral 33-ft. (10 m) optimum EMI/RFI protected cable
50	Integral 50-ft. (15 m) optimum EMI/RFI protected cable
06	Integral 100-ft. (30 m) optimum EMI/RFI protected cable
Special	
_	No selection
99	Special (consult factory)
Calibration and conformance certificates - optional level	
CC	Certificate of Calibration (no test data given)
LC	Loop Calibration Certificate (sensor and transmitter calibrated together, with test data)
EC	Electronic Calibration Certificate (sensor calibrated against factory instrument, with test data)

Specifications

Table 2: Sensor Specifications

Physical characteristics	Specifications
Range	0 to 20 ppm (mg/L) as O_2. For measurements at the ppb level, choose Rosemount 499ATrDO.
Pressure	0 to 65 psig (101 to 549 kPa abs)
Temperature (operating)	32 to 122 °F (0 to 50 °C)

Table 2: Sensor Specifications *(continued)*

Physical characteristics	Specifications
Process connection	1-in. male national pipe thread (MNPT)
Wetted parts	Noryl®, Viton®, EPDM, Teflon® , and silicone
Cathode	Gold (not normally wetted)
Accuracy	±0.2 ppm at 77 °F (25 °C)
Linearity	2% (typical)
Repeatability	±0.5% of reading at 77 °F (25 °C)
Response time	<20 sec to 90% of final reading (0 to 2 ppm) at 77 °F (25 °C)
Electrolyte volume	0.8 oz. (25 mL), approximately
Electrolyte life	4 to 6 months (approximately)
Cable length	See Table 1 for standard cable lengths.
Cable length (maximum)	300 ft. (91 m), up to 100 ft. (30.5 m) is standard.
Sample flow	Flow through: 1 to 5 gpm (3.8 to 19 L/min) Open channel: 1 ft./sec (0.3 m/sec) Low flow cell: 2 to 5 gph (7.6 to 19 L/hr) Agitation produced by bubbles in aeration basins usually provides adequate flow.
Weight/shipping weight	1 lb./3 lb. (0.5 kg/1.5 kg)

Table 3: Other Specifications

Type	PN	Wetted materials	Process connection	Maximum temperature	Maximum pressure
1½-in. tee	23567-00	CPVC and Buna N; body is schedule 80 CPVC	1½-in. socket	122 °F (50 °C)	65 psig (549 kPa abs)
2-in. tee	915240-03	PVC and Buna N; body is schedule 80 PVC	¾-in. NFPT	120 °F (49 °C)	60 psig (515 kPa abs)
	915240-04		1-in. NFPT		
	915240-05		1½-in. NFPT		
Low flow cell (1)	24091-01	Polycarbon-ate/ polyester, 316 stainless steel, and silicone	Compression fitting for ¼-in. O.D. tubing or ¼-in. female national pipe thread (FNPT)	158 °F (70 °C)	90 psig (722 kPa abs)
Spray cleaner	12707-00	PVC, polypropylene, and 315 stainless steel	Connection for cleaning fluid: Compression fitting for ¾-in. tubing		
Valved rotameter	9390004 for use with low flow cell Flow: 0.5 to 5 gph (1.4 to 19 L/hr)	Acrylic, 316 stainless steel, and Viton	¼-in. NFPT (316 stainless steel)	150 °F (65 °C)	100 psig (858 kPa abs)

(1) Temperature and pressure specifications for the low flow cell exceed the temperature and pressure specifications for the sensor.

Dimensional drawings

Figure 1: Standard Sensor with Integral Cable

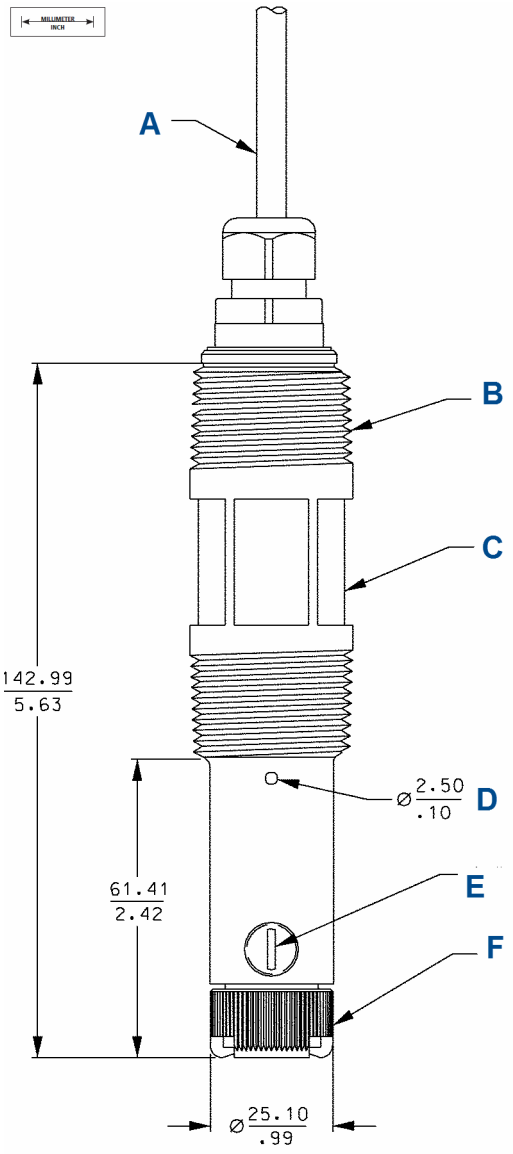

A. Sensor cable
B. 1-in. national pipe thread (NPT), two places
C. 1-3/16-in.-wrench opening
D. Pressure equalizing port, two places
E. ⅛-in. NPT, electolyte fill plug
F. Membrane retainer

Figure 2: Sensor with Variopol Cable Connector

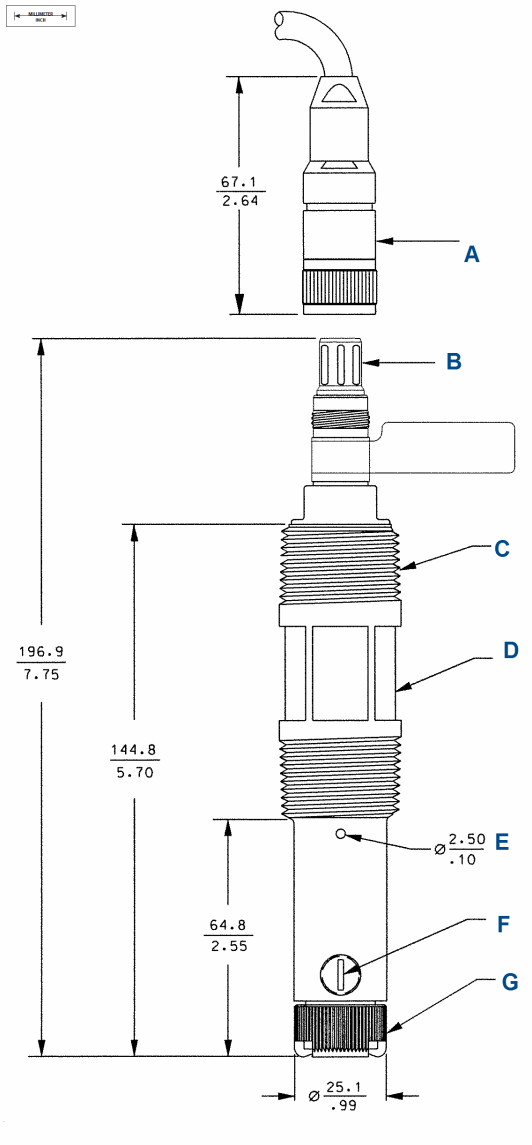

A. Variopol receptacle (female connector)
B. Variopol plug (male connector)
C. 1-in. NPT, two places
D. 1-3/16-in. wrench opening
E. Pressure equalizing port, two places
F. ⅛-in. NPT electrolyte fill plug
G. Membrane retainer

Figure 3: Low Flow Cell (PN 24091-00)

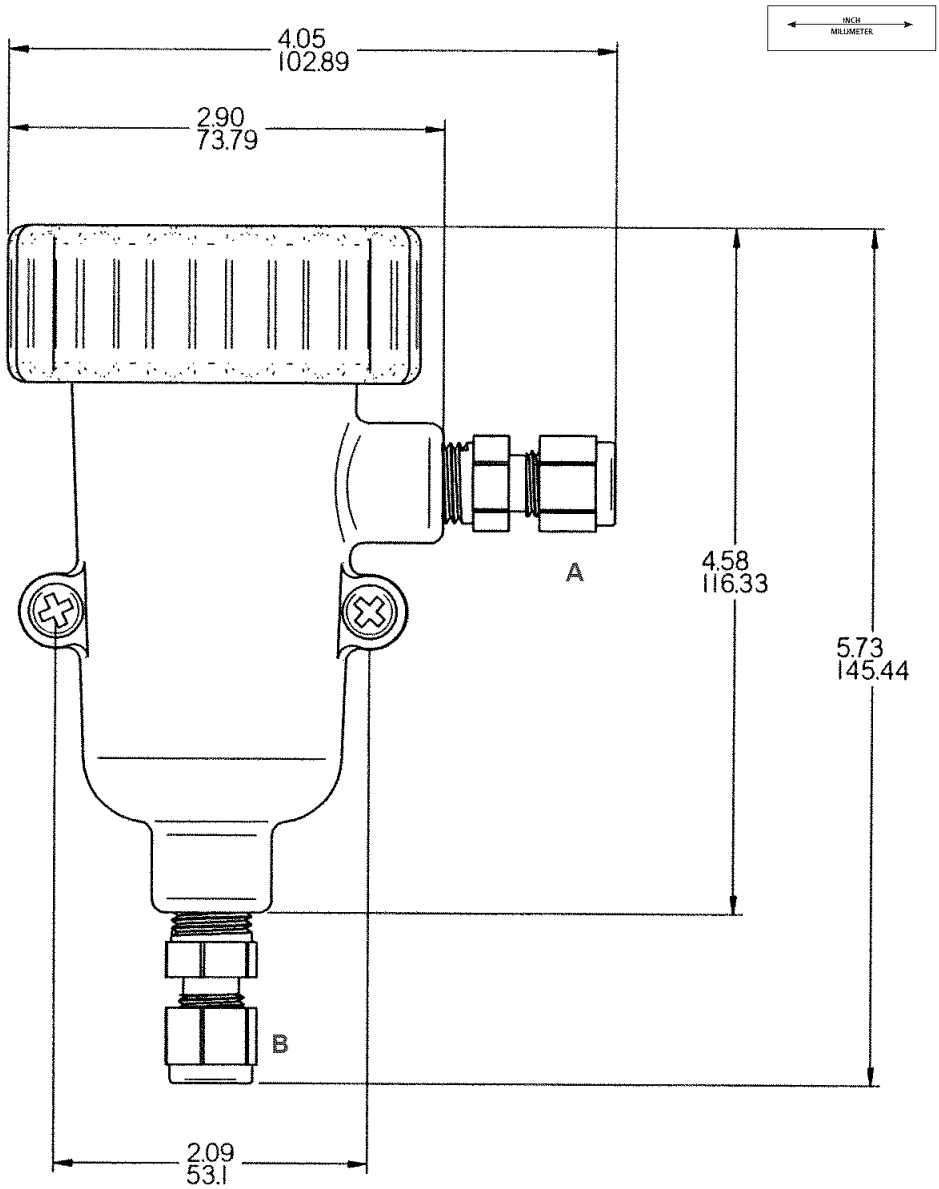

A. Outlet
B. Inlet

Figure 4: Flow-Through Tee (1½-in.) (PN 23567-00)

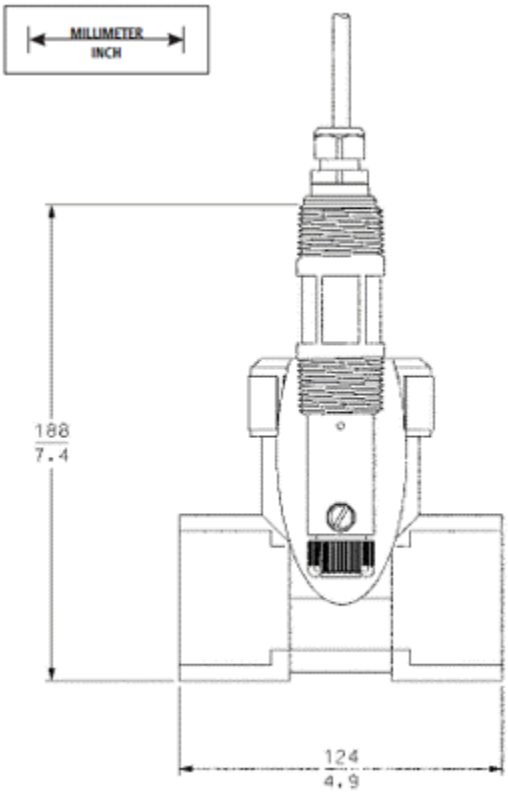

Allow at least 3.5 in. (90 mm) head room for sensor removal.

Figure 5: Flow-Through Tee (2 in.) (PN 915240-03, -04, -05)

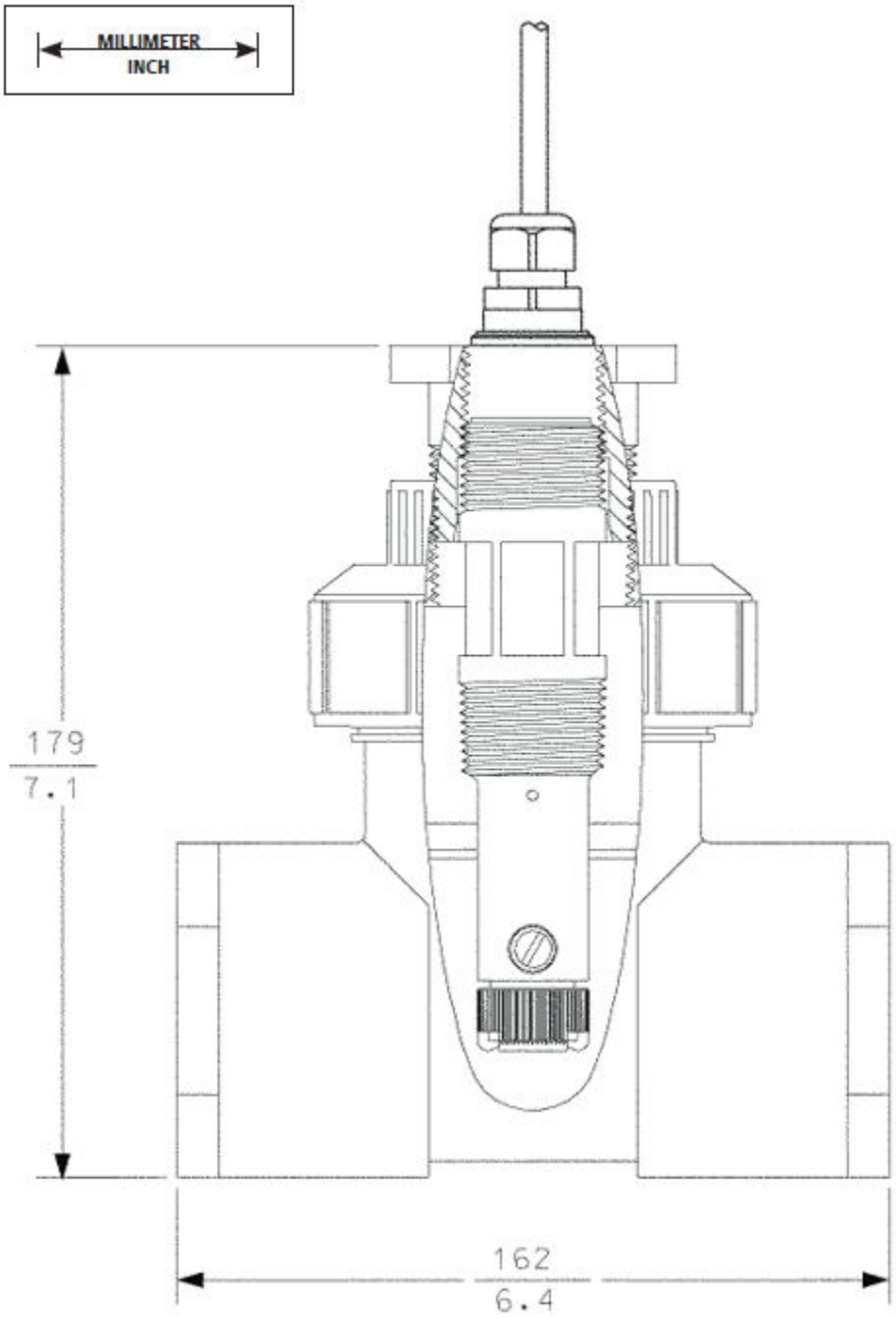

Allow at least 6 in. (150 mm) head room for sensor removal.

Figure 6: Handrail Mounting Assembly (PN 11275-01)

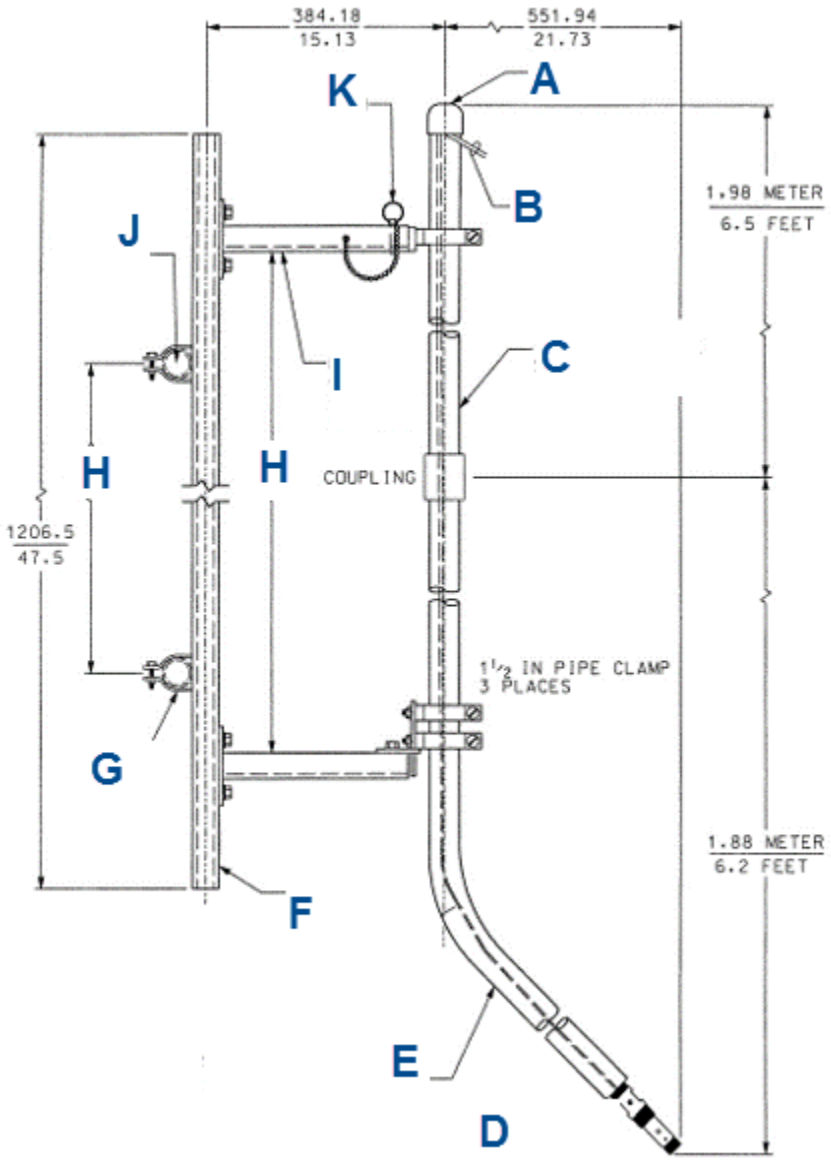

A. End cap PVC
B. Sensor cable
C. 1½-in. PVC pipe schedule 80
D. Sensor Rosemount 499: Regularly check to make sure connections are water tight.
E. Sweep pipe with 1-in. male national pipe thread (MNPT) adapter
F. Unistrut 1⅝-in. x 1⅝-in. aluminum
G. 1½-in. pipe clamp two places
H. Can be any convenient dimension
I. Mounting channel aluminum two places
J. Customer handrail two places
K. Locking pin with bead chain

Figure 7: Jet Spray Cleaner (PN 12707-00)

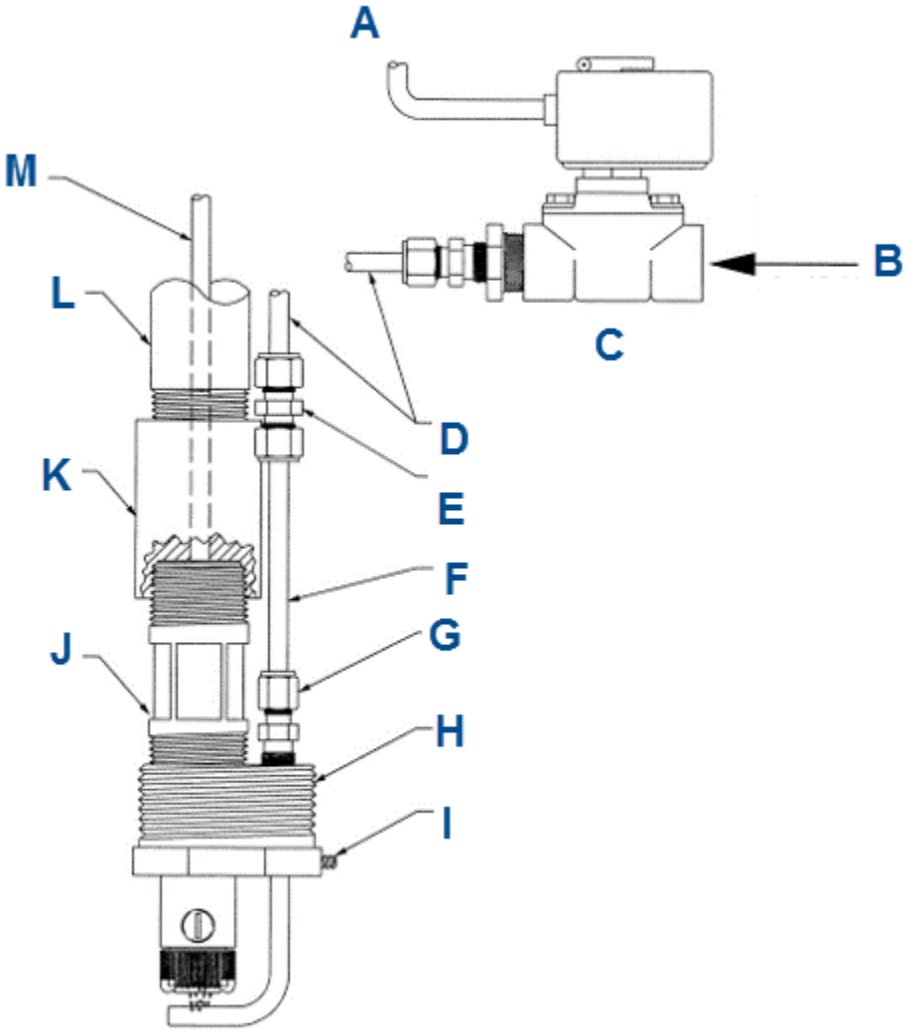

A. *To timer (supplied by others) or use interval timer in 54ea*
B. *Water, air, or cleaning solution (by others)*
C. *Solenoid valve (supplied by others)*
D. *Tubing (supplied by others)*
E. *¼-in. union compression fitting, polypropylene*
F. *¼-in. 316 stainless steel tubing*
G. *¼-in. male connector, polypropylene. Tighten to hold spray arm in position.*
H. *PVC*
I. *Stainless steel set screw to adjust spray nozzle height*
J. *Sensor*
K. *1-in. coupling (supplied by others)*
L. *1-in. pipe (supplied by others)*
M. *Sensor cable*

Accessories

Table 4: Connector Cable (Required for All First Time Installations)

Part number	Description
23747-02	Cable, VP 6, conductivity/amperometric, 10-ft. (3.0 m)
23747-03	Cable, VP 6, conductivity/amperometric, 50-ft. (15.2 m)
23747-04	Cable, VP 6, conductivity/amperomentric, 4-ft. (1.2 m)
23747-05	Cable, VP 6, conductivity/amperometric, 2.25-ft. (0.7 m)
23747-06	Cable, VP 6, conductivity/amperometric, 2.5-ft. (0.8 m)
23747-07	Cable, VP 6, conductivity/amperometric, 15-ft. (4.6 m)
23747-08	Cable, VP 6, conductivity/amperometric, 20-ft. (6.1 m)
23747-09	Cable, VP 6, conductivity/amperometric, 25-ft. (7.6 m)
23747-10	Cable, VP 6, conductivity/amperometric, 30-ft. (9.1 m)
23747-11	Cable, VP 6, conductivity/amperometric, 100-ft. (30.5 m)

Table 5: Other Accessories

Part number	Description
11275-01	Handrail mounting assembly
12707-00	Jet spray cleaner
23747-00	Interconnect cable, prepped, specify length, per foot
23567-00	Tee, flow-through, 1½-in.
914240-03	Tee, flow-through, 2-in. PVC, ¾-in. national pipe thread (NPT)
914240-04	Tee, flow-through, 2-in. PVC, 1-in. NPT
915240-05	Tee, flow-through, 2-in. PVC, 1½-in. NPT
33211-00	Retrofit adapter PN 91524-xx tees
33521-01	Smooth membrane retainer (for fouling and dirty applications)
9390004	Rotameter: 0.5 - 5.0 gph
9200266-LQD	Cable, 5 conductors 2/22 GA 3/24 GA OD JKT PVC
9200275	Extension cable, shielded 9-cond, unprepped, specify length, per foot

Table 6: Spare Parts

Part number	Description
23501-00	Membrane assembly with O-ring, dissolved oxygen, quantity - 1
23502-00	Membrane assembly with O-ring, dissolved oxygen, quantity - 3
33521-00	Membrane retainer
33523-00	Fill plug
9210264	Amperometric sensor fill solution, 4 oz. (125 mL)
9550094	O-ring, Viton® 2-014

00813-0100-3491
Rev. AB
October 2019

GLOBAL HEADQUARTERS
Emerson Automation Solutions
6021 Innovation Blvd
Shakopee, MN 55379, USA
+1 800 999 9307 or +1 952 906 8888
F +1 952 949 7001
liquid.csc@emerson.com

NORTH AMERICA
Emerson Automation Solutions
8200 Market Blvd
Chanhassen, MN 55317
Toll Free +1 800 999 9307
F +1 952 949 7001
liquid.csc@emerson.com

EUROPE
Emerson Automation Solutions
Neuhofstrasse 19a P.O. Box 1046
CH-6340 Baar
Switzerland
T + 41 (0) 41 768 6111
F + 41 (0) 41 768 6300
liquid.csc@emerson.com

MIDDLE EAST AND AFRICA
Emerson Automation Solutions
Emerson FZE
Jebel Ali Free Zone
Dubai, United Arab Emirates, P.O. Box 17033
T +971 4 811 8100
F +971 4 886 5465
liquid.csc@emerson.com

ASIA-PACIFIC
Emerson Automation Solutions
1 Pandan Crescent
Singapore 128461
Singapore
T +65 777 8211
F +65 777 0947
liquid.csc@emerson.com

Linkedin.com/company/Emerson-Automation-Solutions
twitter.com/rosemount_news
Facebook.com/Rosemount
youtube.com/RosemountMeasurement

ROSEMOUNT™

EMERSON™