Technical
Information
TI 244F/00/en

# *Limit Switch liquiphant T FTL 260*

## Vibration limit switch for liquids
## The maintenance-free alternative to float switches

### Application
The Liquiphant is a limit switch for liquid level detection in storage tanks, tanks with agitators, and piping.

It can be used as an alternative to float switches as well as in applications where build-up, turbulence, liquid flow and gas bubbles are present.

### Features and Benefits
- Small, slender design: low space requirement, easy mounting in places with limited access
- Stainless steel housing: rugged
- Switching status and external testing: simple control
- Plug connection: low-cost connection

### Measuring System
The Liquiphant FTL 260 is a compact limit switch, to which miniature contactors , magnetic valves and programmable logic controllers (PLC) can be directly connected.

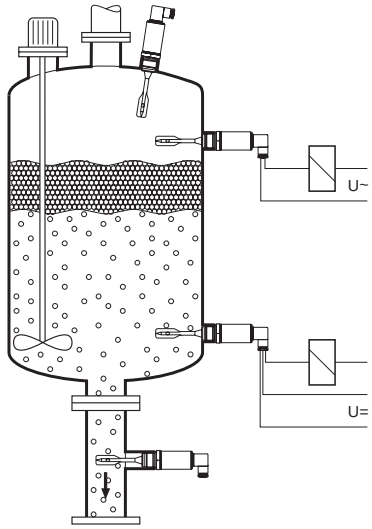


Endress+Hauser
The Power of Know How

# Function and Dimensions

The symmetrical vibrating fork is excited to its resonant frequency which changes when the fork is submerged in liquid. The change is registered by the electronics, which actuate an electronic switch.

The Liquiphant FTL 260 can be operated in both minimum or maximum fail-safe mode, i.e. the electronic switch opens on reaching the limit value, in cases of fault or a loss of power.

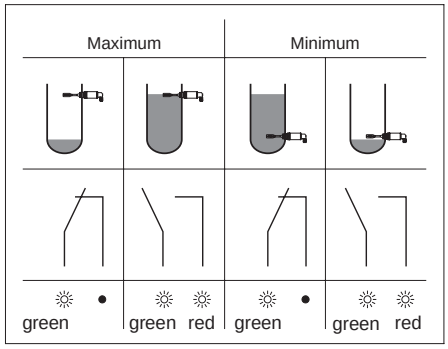


Diagram showing the function of the **electronic** switch and LED depending on the level and fail-safe mode

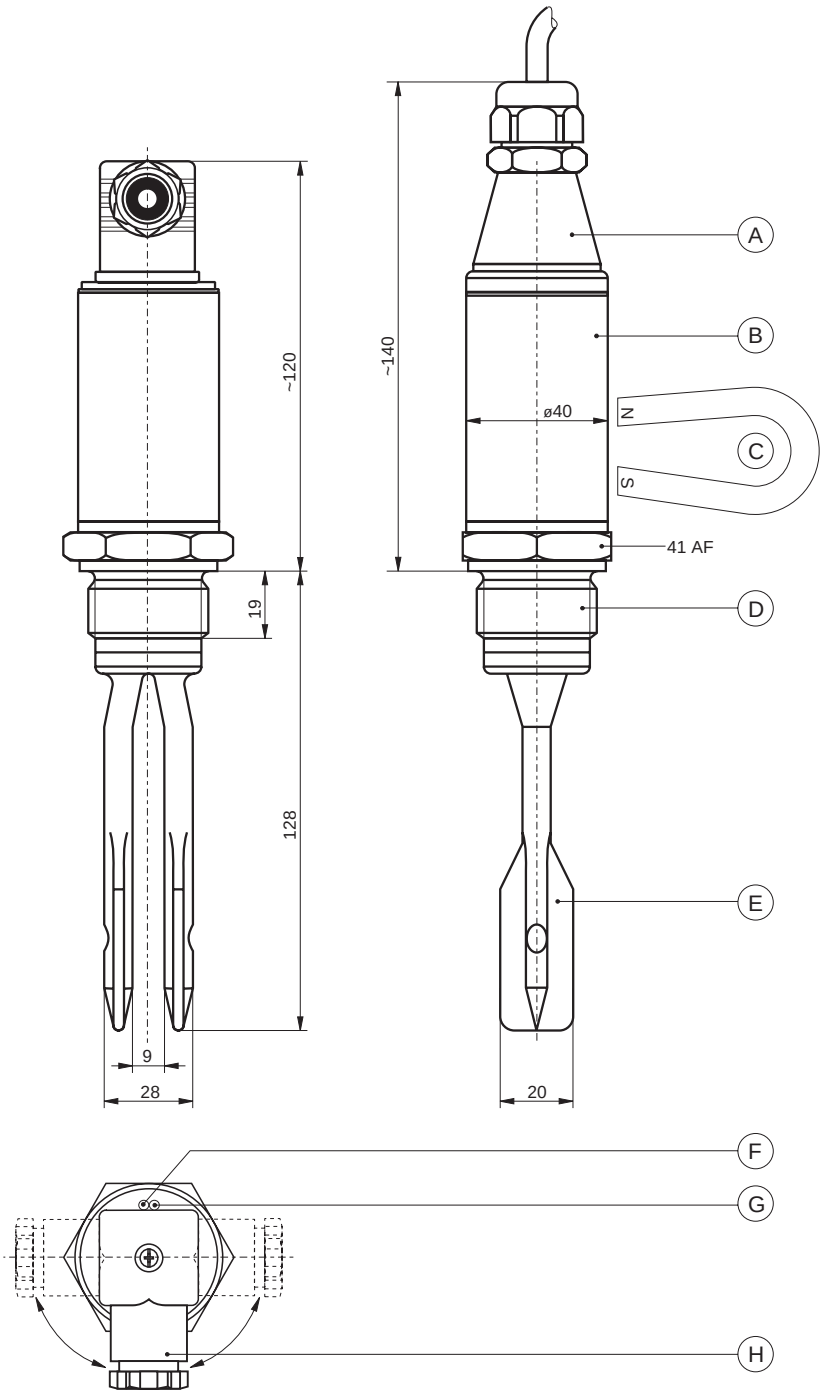


A Electrical connection with a standard plug and with cable gland Pg 11 (IP 65 / 67) or permanently attached cable (IP 68).
The fail-safe mode is determined by the way the connection is wired

B The stainless steel housing protects the potted electronics

C The switching function can be checked externally by placing a magnet on the housing

D Process connection versions:
G 1 A (parallel)
1 - 11½ NPT (tapered)
R 1 (tapered)
in stainless steel

E Vibrating fork in solid stainless steel

F Green LED "Operating mode"

G Red LED to indicate switching mode "Circuit open"

H The plug housing can also be fitted offset by ± 90°

Dimensions in mm
100 mm = 3.94 in
1 in = 25.4 mm

# Installation

The Liquiphant FTL 260 can be mounted in any position in a tank or in a section of piping.

A Vertical mounting

B Horizontal mounting

C Mounting in a 1" nozzle
(A to C for the entire range of viscosities up to 10 000 $mm^2/s$)

D Flanged mounting in a nozzle
(Liquiphant screwed into blind flange),
Range of viscosities at DN 50
up to max. 2 000 $mm^2/s$

E For easy mounting in limited space:
mount with 41 AF box spanner
(Endress+Hauser accessory)

▶ Switchpoint

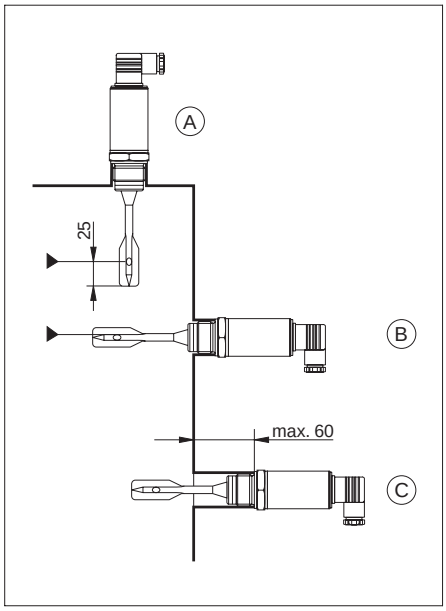


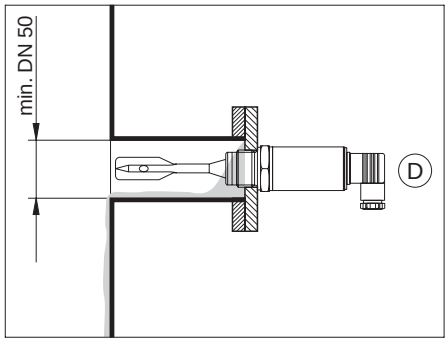


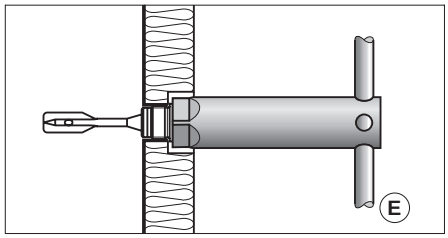


# Electrical Connection

Electrical connection depending on version and fail-safe mode

Max. = maximum fail-safe mode

Min. = minimum fail-safe mode

② = cable connection

BU = blue
BK = black
BN = brown
GNYE = green/yellow

⓪ = plug connection

R = external load

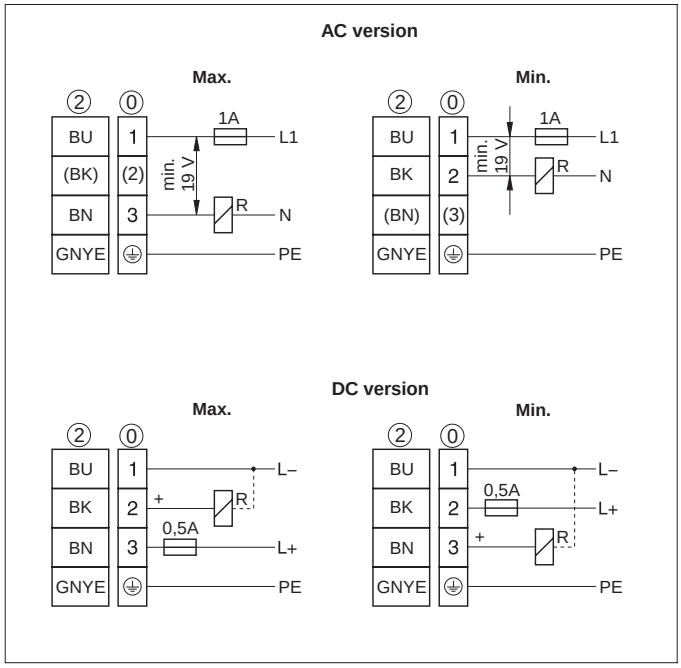


## AC Version

A load must be connected in series with the Liquiphant, whereby:

- the voltage drop across the Liquiphant in closed mode (ON) may be up to 12 V
- a minimum terminal voltage of 19 V is required for the unit to switch correctly (check in particular for a low line voltage).

In open mode (OFF) a residual current of max. 3.8 mA flows.

## DC Version

Recommended when used with programmable logic controllers (PLC). Positive signal at the switching output of the Liquiphant (PNP).

The fail-safe mode is determined by the way the output is connected up.

# Technical Data

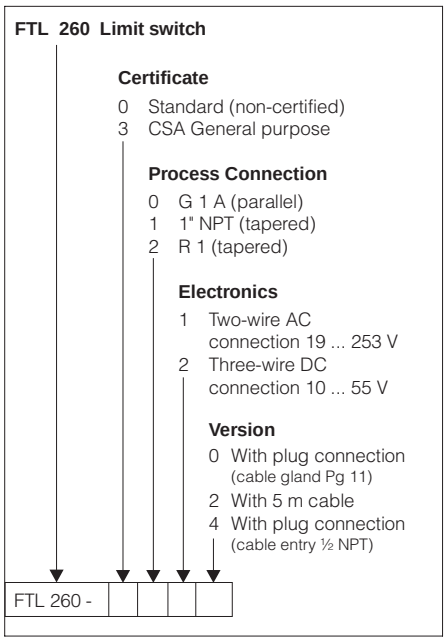


Product structure

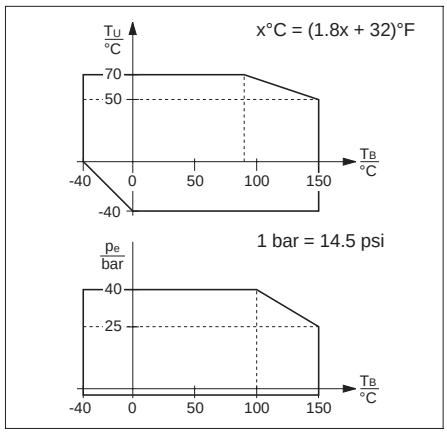


Top graph:
Permissible values for ambient temperature $T_u$ at housing are dependent on the operating temperature $T_B$ in the tank

Bottom graph:
Permissible values for operating pressure $p_e$ are dependent on the operating temperature $T_B$ in the tank

# Technical Data

**Output AC version**

| | |
|---|---|
| Power supply | Voltage at terminals 19 ... 253 V, 50 / 60 Hz, current consumption (stand-by) max. 4 mA |
| Connectable load<br>(load switched over thyristor directly into the power supply circuit) | Short-term (40 ms): max.1.5 A; max. 375 VA at 250 V or max. 36 VA at 24 V<br>(no short-circuit protection)<br>Continuous: max. 87 VA at 250 V (350 mA), max. 8.4 VA at 24 V (350 mA)<br>min. 2.5 VA at 250 V (10 mA), min. 0.5 VA at 24 V (20 mA)<br>Voltage drop across FTL 260: max. 12 V<br>Residual current: max. 4 mA with open thyristor (stand-by) |

**Output DC version**

| | |
|---|---|
| Power supply | 10 ... 55 V, ripple max. 1.7 V, 0 ... 400 Hz, current consumption max. 15 mA, reverse polarity protection |
| Connectable load<br>(The load is switched via PNP-transistor) | Short-term (1 ms): max.1 A, max. 55 V (overload and short-circuit protection)<br>Continuous: max. 350 mA<br>max. 0.5 µF at 55 V, max. 1µF at 24 V<br>Residual voltage: < 3 V (with closed transistor)<br>Residual current: < 100 µA (with open transistor) |

**Output**

| | |
|---|---|
| Fail-safe mode | Minimum or maximum fail-safe mode, depending on load connection |
| Signal failure | Output open |
| Switching time | Approx. 0.5 s when covered, approx. 1.0 s when free |
| Hysteresis | Approx. 4 mm with vertical mounting |

**Process conditions**

| | |
|---|---|
| Orientation | As required |
| Ambient temperature | -40 °C ... +70 °C, see also graphs on Page 3 |
| Temperature of product | -40 °C ... +150 °C, see also graphs on Page 3 |
| Operating pressure $p_e$ | - 1 bar ... +40 bar, see also graphs on Page 3 |
| Storage temperature | -40 °C ... +85 °C |
| Climatic protection | Climatic protection to IEC 68, Part 2-38, Fig. 2a |
| Ingress protection to EN 60529 | With plug (cable gland Pg 11) IP 65 / IP 67, with cable IP 68 (24 h, 1.5 m) |
| Electromagnetic Compatibility | Interference Emission to EN 61326, Electrical Equipment Class B<br>Interference Immunity to EN 61326, Annex A (Industrial) and<br>NAMUR Recommendation NE 21 (EMC) |
| Density ρ of product | min. 0,7 g/cm$^3$ |
| Viscosity ν of product | up to 10 000 mm$^2$/s |

**Mechanical construction**

| | |
|---|---|
| Design | Compact unit, mounted using a 41 AF box spanner or open end spanner |
| Dimensions | See dimensional sketch on Page 2 |
| Weight | Approx. 0.45 kg |
| Materials | Process connection and vibrating fork: stainless steel 1.4571, 1.4581 (AISI 316 Ti)<br>Housing: stainless steel 1.4404 (AISI 316 L), Housing cover: PPSU<br>Plug: PA, Plug seal: elastomer<br>Flat seal ring for process connection G 1 A: elastomer-fibre, asbestos-free,<br>resistant to oils, solvents, vapours, weak acids and alkalis |
| Process connections | Parallel thread G 1 A to DIN ISO 228/I with flat seal 33x39 to DIN 7603<br>Tapered thread 1 - 11$^1/_2$ NPT to ANSI B 1.20.1<br>Tapered thread R 1 to DIN 2999 Part 1 |
| Electrical connection | 4-pole plug connection to DIN 43650-A, ISO 4400 with cable gland Pg 11<br>for cable diameters 6 to 9 mm or cable entry ½ NPT;<br>max. wire cross section 1,5 mm$^2$<br>or 5 m permanently attached cable, 4 x 0.75 mm$^2$ |

**Ordering**

| | |
|---|---|
| Product structure | See product structure on Page 3 |
| Accessories | Box spanner 41 AF - order number 942 667-0000<br>Test magnet - order number 016920-0000 |
| Supplementary Documentation | System Information “Liquiphant” SI 007F/00/e |

Endress+Hauser
GmbH+Co. KG
Instruments International
P.O. Box 2222
D-79574 Weil am Rhein
Germany

Tel. (0 76 21) 9 75-02
Fax (0 76 21) 9 75-3 45
http://www.endress.com
info@ii.endress.com

Endress+Hauser
The Power of Know How

05.02/PT1

TI 244F/00/en/11.99 (b)
CCS/CV5